EVERLIGHT ELECTRONICS CO.,LTD.

Technical Data Sheet

0.6mm Height Flat Top LED

19-213/W1D-ANPHY/3T

Features

- Package in 8mm tape on 7″ diameter reel.
- Compatible with automatic placement equipment.
- Compatible with infrared and vapor phase reflow solder process.
- Mono-color type.

Descriptions

- The 19-213 SMD Taping is much smaller than lead frame type components, thus enable smaller board size, higher packing density, reduced storage space and finally smaller equipment to be obtained.
- Besides, lightweight makes them ideal for miniature applications. etc.

Applications

- Automotive: backlighting in dashboard and switch.
- Telecommunication: indicator and backlighting in telephone and fax.
- Flat backlight for LCD, switch and symbol.
- General use.

Device Selection Guide

Part No.	Chip		Lens Color
	Material	**Emitted Color**	
19-213/W1D-ANPHY/3T	**InGaN**	**Pure White**	**Yellow Diffused**

Package Outline Dimensions

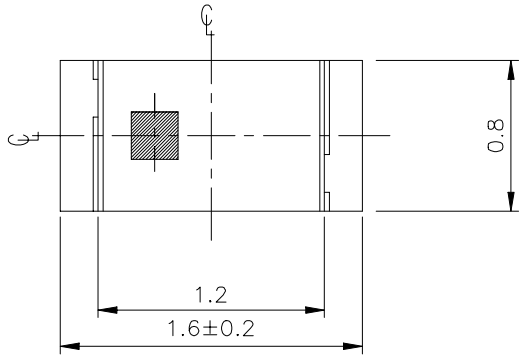

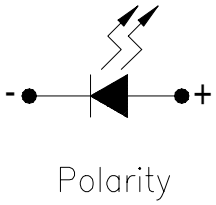

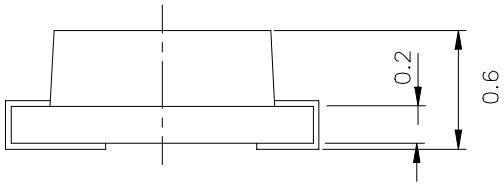

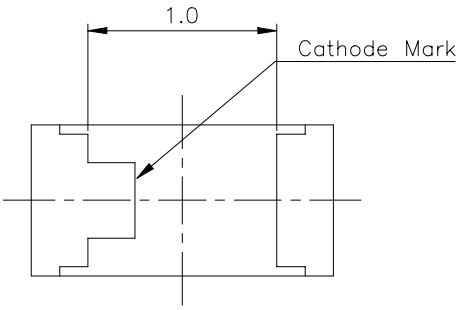

For reflow soldering (Propose)

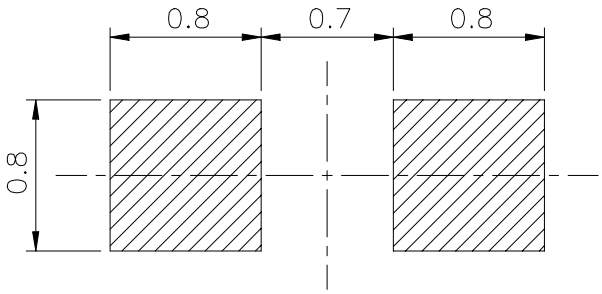

Note: The tolerances unless mentioned is ± 0.1mm , Angle± 0.5° ,Unit = mm

Absolute Maximum Ratings (Ta=25℃)

Parameter	Symbol	Rating	Unit
Reverse Voltage	V_R	5	V
Forward Current	I_F	25	mA
Operating Temperature	Topr	-40 ~ +85	℃
Storage Temperature	Tstg	-40 ~ +90	℃
Soldering Temperature	Tsol	260 (for 5 seconds)	℃
Power Dissipation	Pd	110	mW
Electrostatic Discharge	ESD	150	V
Peak Forward Current (Duty 1/10 @1KHz)	I_F	100	mA

Electro-Optical Characteristics (Ta=25℃)

Parameter	Symbol	Min.	Typ.	Max.	Unit	Condition
Luminous Intensity	I_V	28.5	-----	72.0	mcd	I_F=5mA
Viewing Angle	$2\theta 1/2$	-----	130	-----	deg	I_F=5mA
Forward Voltage	V_F	2.70	-----	3.15	V	I_F=5mA
Reverse Current	I_R	-----	-----	50	μA	V_R=5V

Bin Range Of Luminous Intensity & Forward Voltage

Symbol	Bin Code	Min.	Max.	Unit	Condition
I_V	N	28.5	45.0	mcd	I_F=5mA
	P	45.0	72.0		
V_F	15	2.70	2.85	V	I_F=5mA
	16	2.85	3.00		
	17	3.00	3.15		

Notes:

1.Tolerance of Luminous Intensity ± 15%

2.Tolerance of Forward Voltage ± 0.1V

Chromaticity Coordinates Specifications for Bin Grading

I_F= 5mA

Groups	Bin Code	CIE_x	CIE_y
A	1	0.274	0.226
		0.274	0.258
		0.294	0.286
		0.294	0.254
	2	0.274	0.258
		0.274	0.291
		0.294	0.319
		0.294	0.286
	3	0.294	0.254
		0.294	0.286
		0.314	0.315
		0.314	0.282
	4	0.294	0.286
		0.294	0.319
		0.314	0.347
		0.314	0.315
	5	0.314	0.282
		0.314	0.315
		0.334	0.343
		0.334	0.311
	6	0.314	0.315
		0.314	0.347
		0.334	0.376
		0.334	0.343

Notes:

1. **The C.I.E. 1931 chromaticity diagram (Tolerance ± 0.01).**
2. **The products are sensitive to static electricity and care must be fully taken when handling products.**

■CIE Chromaticity Diagram

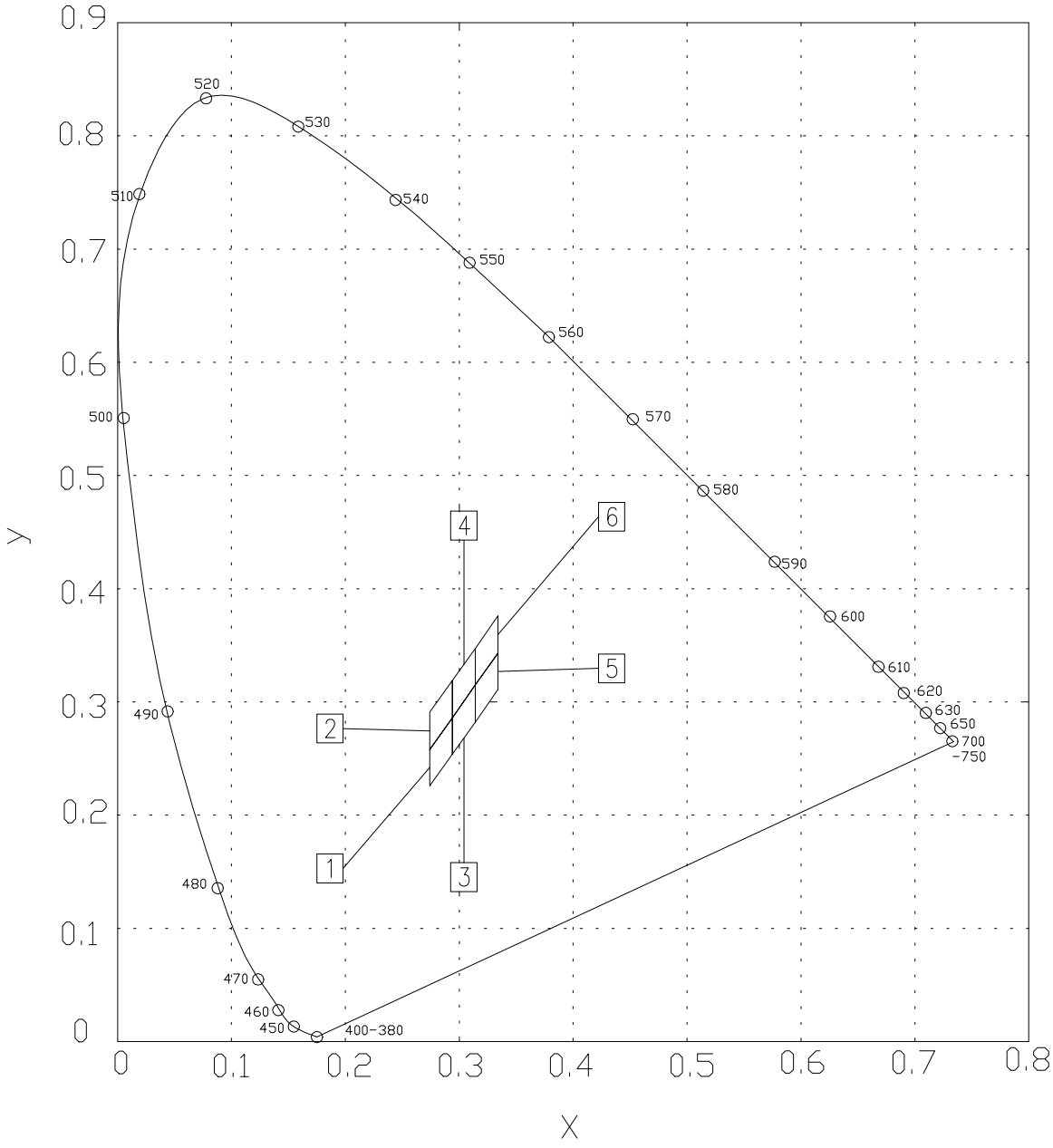

Typical Electro-Optical Characteristics Curves

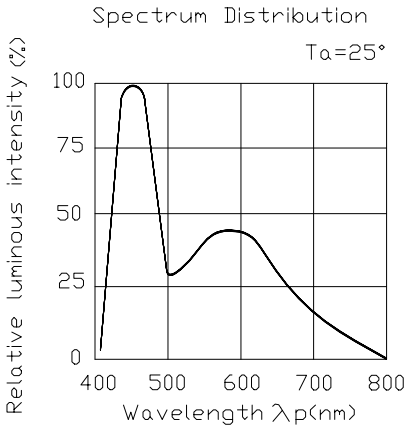

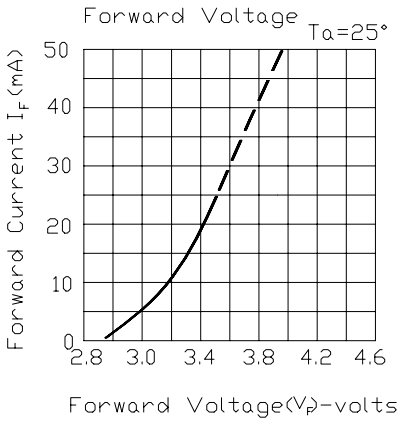

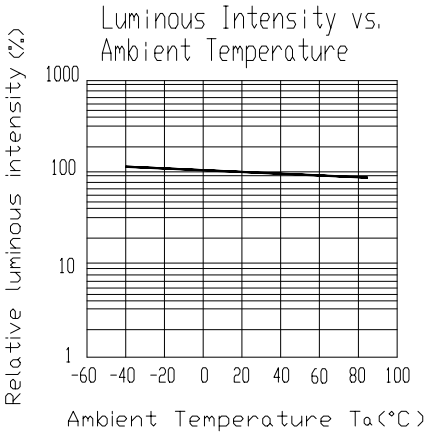

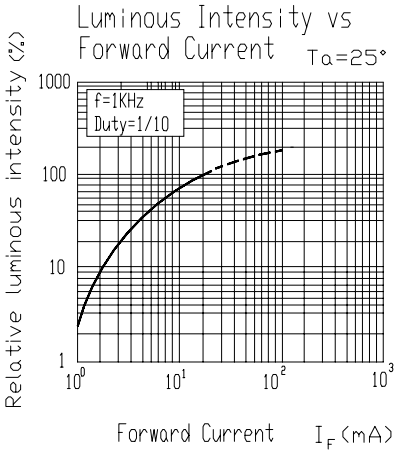

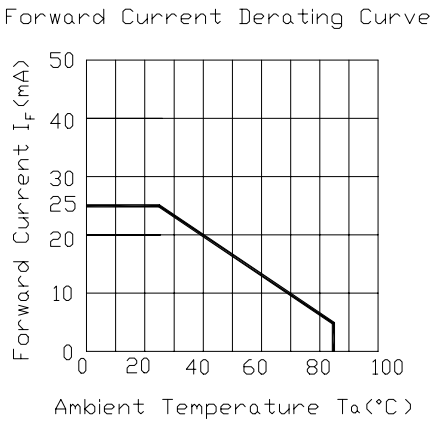

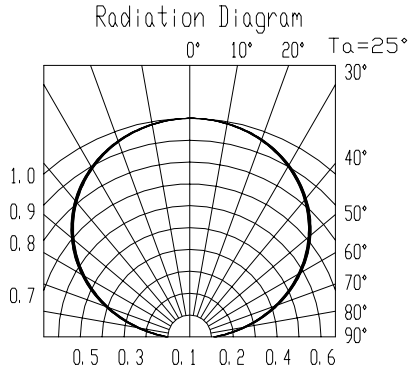

Label explanation

CAT: Luminous Intensity (mcd) HUE: Chromaticity Coordinates REF: Forward Voltage (V)

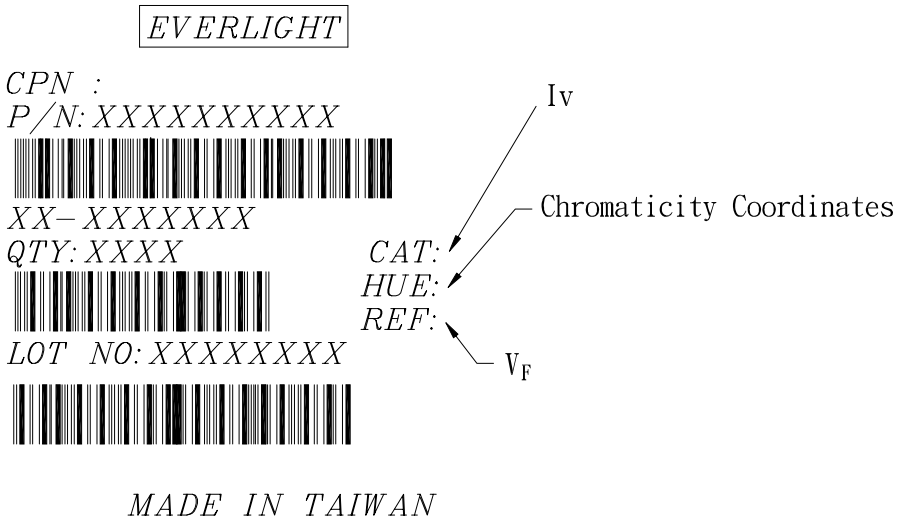

Reel Dimensions

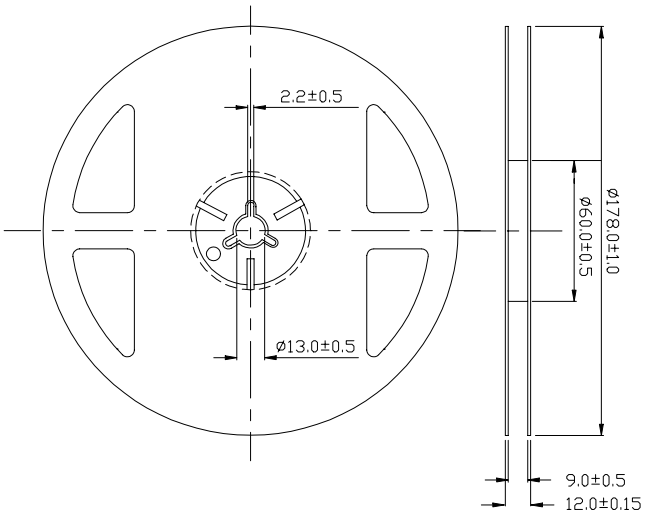

Taping Quantity: 3000pcs

Note: The tolerances unless mentioned is ± 0.1mm , Angle± 0.5° ,Unit = mm

■ Carrier Tape Dimensions

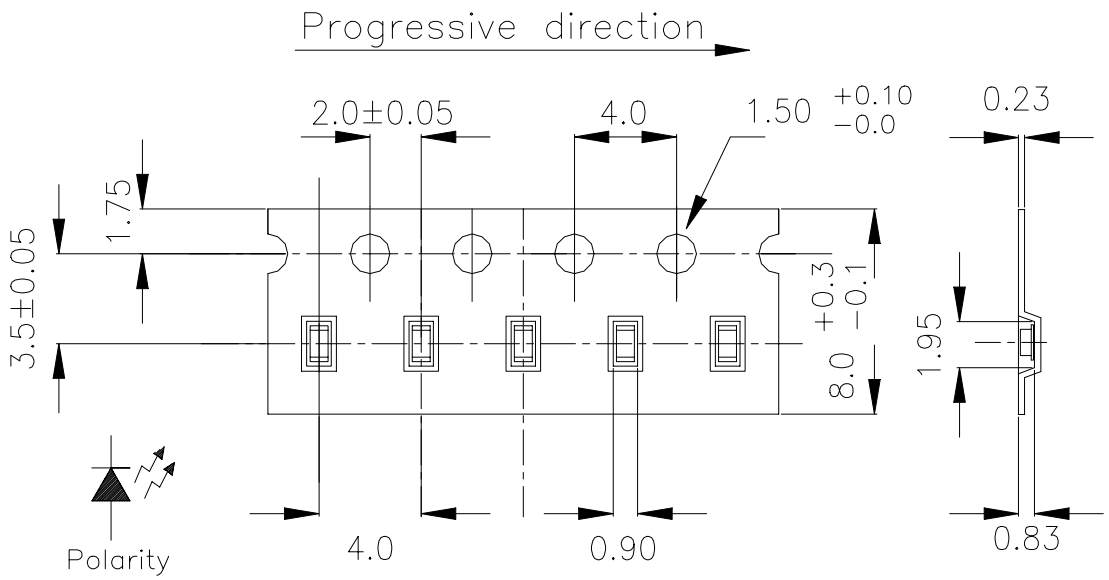

Note: The tolerances unless mentioned is ± 0.1mm , Angle± 0.5° ,Unit = mm

■ Moisture Resistant Packaging

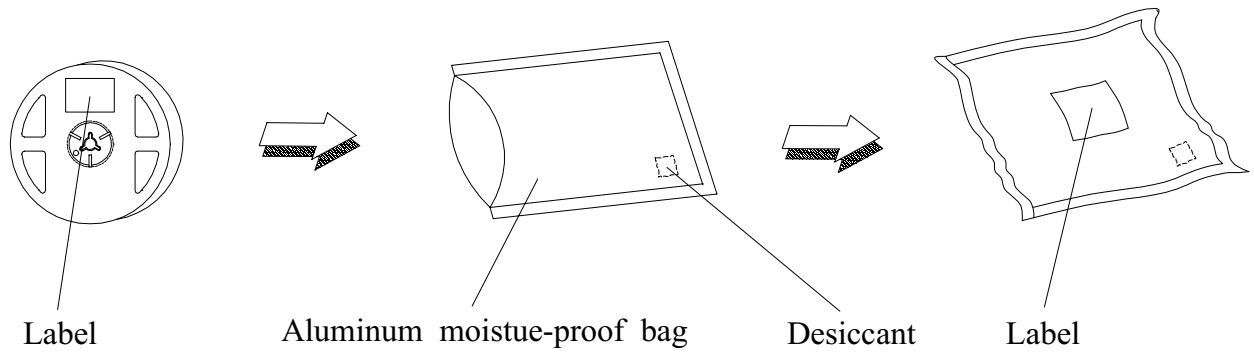

Reliability Test Items And Conditions

The reliability of products shall be satisfied with items listed below.
Confidence level : 90 %
LTPD : 10 %

No.	Items	Test Condition	Test Hours/Cycles	Sample Size	Ac/Rc
1	Reflow	Temp. : 240℃± 5℃ Min. 5 sec.	6 Min.	22 Pcs.	0/1
2	Temperature Cycle	H : +100℃ 15min. ∫ 5 min. L : -40℃ 15min.	300 Cycles	22 Pcs.	0/1
3	Thermal Shock	H : +100℃ 5min. ∫ 10 sec. L : -10℃ 5min.	300 Cycles	22 Pcs.	0/1
4	High Temperature Storage	Temp. : 100℃	1000 Hrs.	22 Pcs.	0/1
5	Low Temperature Storage	Temp. : -55℃	1000 Hrs.	22 Pcs.	0/1
6	DC Operating Life	I_F = 20 mA	1000 Hrs.	22 Pcs.	0/1
7	High Temperature / High Humidity	85℃/R.H85%	1000 Hrs.	22 Pcs.	0/1

Precautions For Use

1. Over-current-proof

   Customer must apply resistors for protection , otherwise slight voltage shift will cause big current change (Burn out will happen).

2. Storage time

   2.1 The operation of Temperature and RH are : 5℃~35℃, RH60%.

   2.2 Once the package is opened, the products should be used within a week. Otherwise, they should be kept in a damp proof box with descanting agent. Considering the tape life , we suggest our customers to use our products within a year(from production date).

   2.3 If opened more than one week in an atmosphere 5℃~35℃, RH 60%, they should be treated at 60℃± 5℃ for 15hrs.

   2.4 When you discover that the desiccant in the package has a pink color (Normal = blue) , you should treat them in the same conditions as 2.3.

Soldering heat

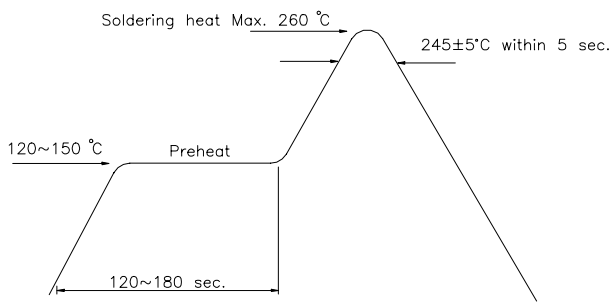

Reflow Temp / Time

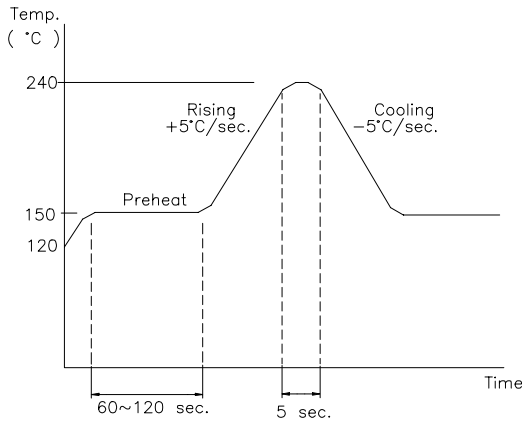

Soldering Iron

Basic spec is ≦5 sec when 260℃.If temperature is higher, time should be shorter (+10℃→ -1sec). Power dissipation of Iron should be smaller than 15 W , and temperature should be controllable. Surface temperature of the device should be under 230 ℃.

Rework

1. Customer must finish rework within 5 sec under 245℃.
2. The head of iron can not touch copper foil.
3. Twin-head type is preferred.

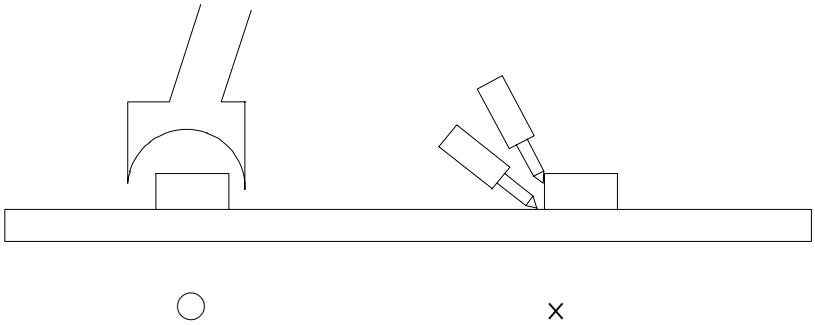

EVERLIGHT ELECTRONICS CO., LTD.
Office: No 25, Lane 76, Sec 3, Chung Yang Rd,
Tucheng, Taipei 236, Taiwan, R.O.C
Tel: 886-2-2267-2000, 2267-9936
Fax: 886-2267-6244, 2267-6189, 2267-6306
http://www.everlight.com