EVERLIGHT ELECTRONICS CO,,LTD.

DEVICE NUMBER : DLE-952-195 REV : 1.1

ECN : PAGE : 1/5

1.8mm Round Subminiature "Gull Wing" Lead (Square Base) LEDs

PART NO. : 95-21UYOC/S530-A2/TR7

Features :

- Compatible with automatic placement equipment.
- Compatible with infrared and vapor phase reflow solder process.
- IC compatible.
- EIA std package.
- Mono-color type.

Package Dimensions :

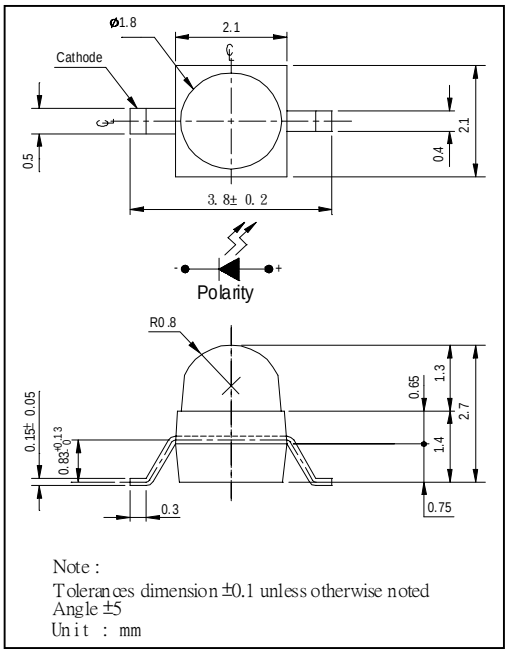

Descriptions :

- The 95-21 SMD taping is much smaller than lead frame type compoments. Thusenable smaller board size. Higher packing density. Reduced storage space and finally smaller equipment to be obtained.
- Besides, light weight makes them ideal for miniature applications, etc.
- Furthermore by automation assembly machines the accuracy is anticipated.

Applications :

- Small indicator for outdoor applications.
- Flat backlight for LCD, switches and symbols.
- Indicator and backlight in office equipment.
- Indicator and backlight for battery driven equipment.
- Indicator and backlight for audio and video equipment.
- Automotive : backlighting in dashboards and switches.
- Telecommunication：indicator and backlighting in telephone and fax.
- General use.

PART NO.	Chip		Lens Color
	Material	Emitted Color	
95-21UYOC/S530-A2/TR7	AlGaInP	Super Yellow	Water Clear

OFFICE : NO. 25,Lane 76,Sec.3, Chung Yang Rd., Tucheng 236, Taipei, Taiwan, R.O.C.
TEL : 886-2-2267-2000,2267-9936
FAX : 886-2-2267-6244,22676189,22676306
http://www.everlight.com

1.8mm Round Subminiature "Gull Wing" Lead (Square Base) LEDs

PART NO. : 95-21UYOC/S530-A2/TR7

■ Package Dimensions

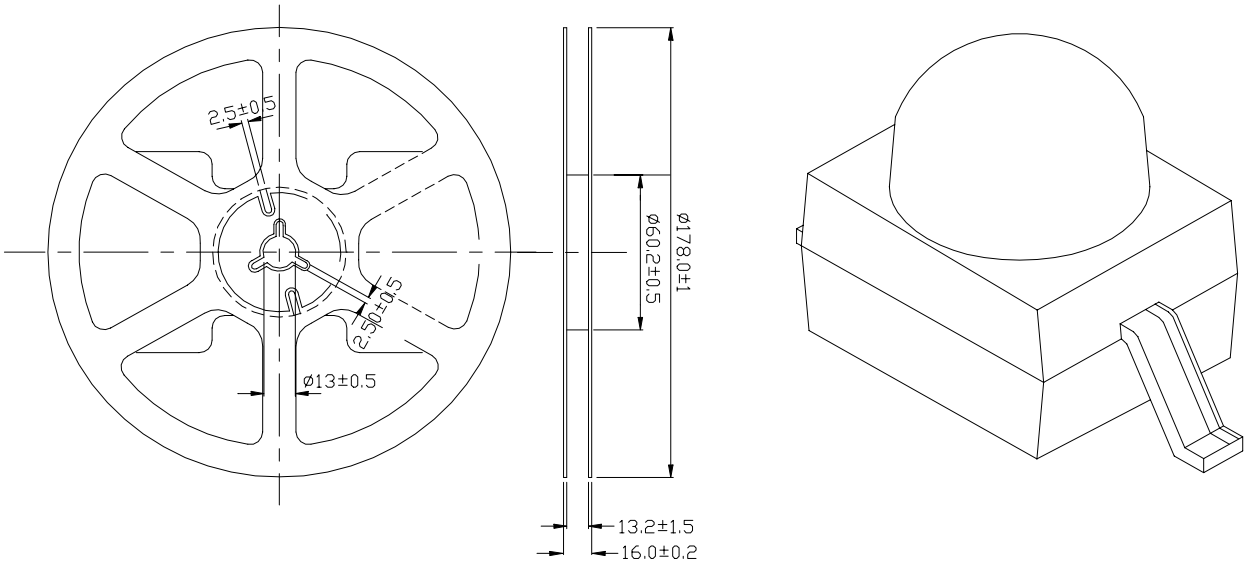

■ Loaded Quantity Per Reel 1000 Pcs/Reel

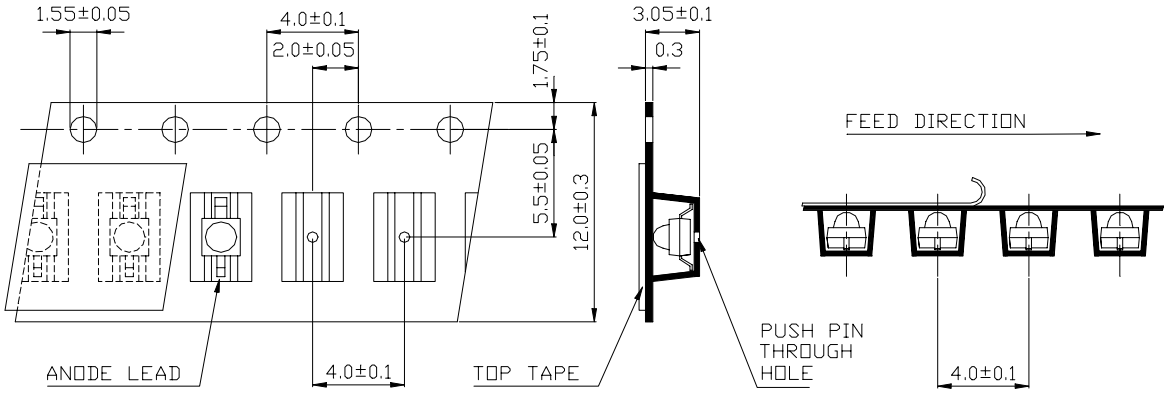

1. All dimensions are in millimeters .
2. Lead spacing is measured where the leads emerge from the package.
3. Protruded resin under flange 1.5 mm (0.59") max.

1.8mm Round Subminiature "Gull Wing" Lead (Square Base) LEDs

PART NO. : 95-21UYOC/S530-A2/TR7

■ Absolute Maximum Ratings at Ta = 25℃

Parameter	Symbol	Rating	Unit
Reverse Voltage	V_R	5	V
Forward Current	I_F	25	mA
Operating Temperature	Topr	-40 ~ +85	℃
Storage Temperature	Tstg	-40 ~ +100	℃
Soldering Temperature	Tsol	260 ± 5 for 5 sec	℃
Electrostatic Discharge	ESD	2000	V
Power Dissipation	Pd	60	mW
Peak Forward Current(Duty 1/10 @ 1KHz)	I_F(Peak)	160	mA

■ Electronic Optical Characteristics :

Parameter	Symbol	MIN.	TYP.	MAX.	Unit	Condition
Luminous Intensity	Iv	----	30	----	mcd	I_F = 2mA
Luminous Intensity	Iv	198	496	----	mcd	I_F = 20mA
Viewing Angle	$2\theta 1/2$	----	25	----	deg	
Peak Wavelength	λp	----	611	----	nm	
Dominant Wavelength	λd	----	605	----	nm	
Spectrum Radiation Bandwidth	$\triangle \lambda$	----	17	----	nm	
Forward Voltage	V_F	----	2.0	2.4	V	
Reverse Current	I_R	----	----	10	μA	V_R=5V

1.8mm Round Subminiature "Gull Wing" Lead (Square Base) LEDs

PART NO. : 95-21UYOC/S530-A2/TR7

■ Typical Electro-Optical Characteristic Curves

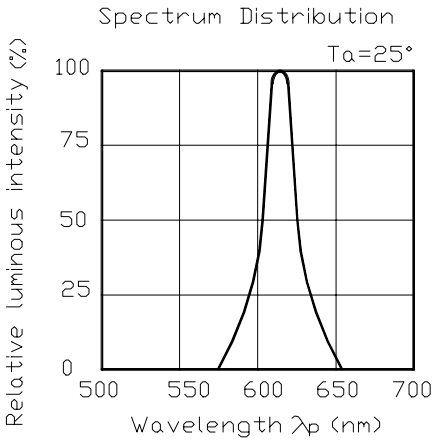

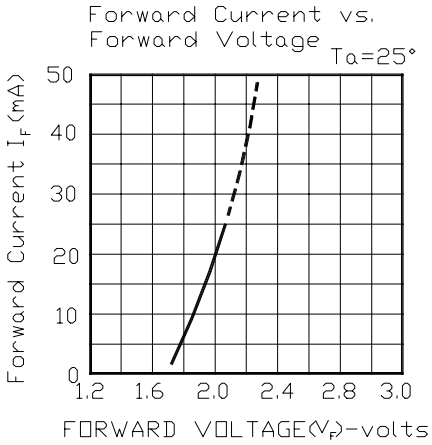

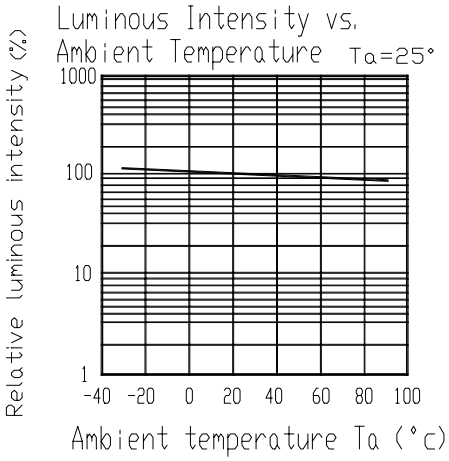

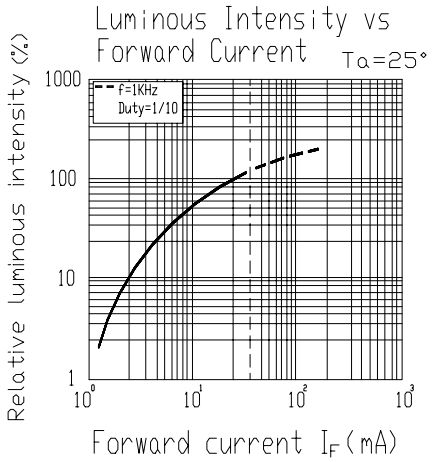

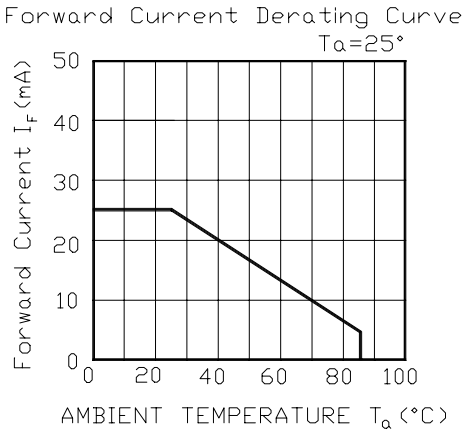

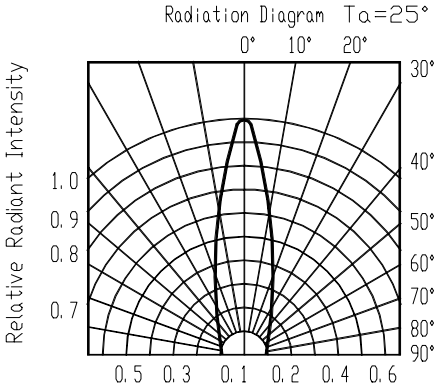

1.8mm Round Subminiature "Gull Wing" Lead (Square Base) LEDs

PART NO. : 95-21UYOC/S530-A2/TR7

■ Reliability Test Items And Conditions

NO.	Item	Test Conditions	Test Hours/ Cycle	Sample Size	Ac/Re
1	Solder Heat	TEMP. : 260℃ ± 5 ℃	5 SEC.	76 PCS	0/1
2	Temperature Cycle	H : +85℃ 30 min. ∫ 5 min. L : -55℃ 30 min.	50 CYCLES	76 PCS	0/1
3	Thermal Shock	H : +100℃ 5 min. ∫ 10 sec. L : -10℃ 30 min.	50 CYCLES	76 PCS	0/1
4	High Temperature Storage	TEMP. : +100℃	1000 HRS	76 PCS	0/1
5	Low Temperature Storage	TEMP. : -55℃	1000 HRS	76 PCS	0/1
6	DC Operating Life	I_F = 20 mA	1000 HRS	76 PCS	0/1
7	High Temperature / High Humidity	85℃ / 85% R H	1000 HRS	76 PCS	0/1